Active Learning with Tabular Language Models

Martin Ringsquandl and Aneta Koleva

Overview

Goal: Reduce labeling effort of domain experts for tabular named entity recognition in industrial spreadsheets.

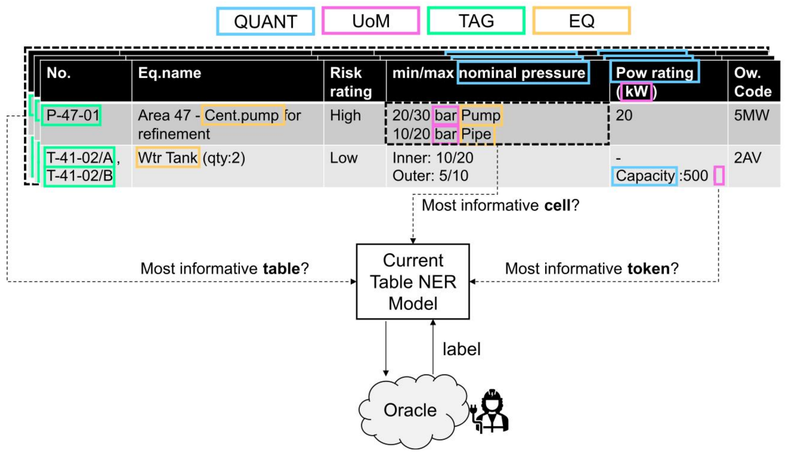

Industrial sub-cell NER problem. TaLM instances are tables, but what to consider for active learning?

Problem:

- Labeling of industrial spreadsheet tables is very expensive
- Sub-cell named entity recognition in tables is a **nested multi-instance problem**
- Table modality and TaLMs have not been studied in active learning

Research questions:

- How to measure label uncertainty with TaLMs and sub-cell NER?
- How to design acquisition functions that select from **informative** and **diverse** set of unlabeled tables, cells, and tokens?

Method

Tabular language model architecture (TabNER)

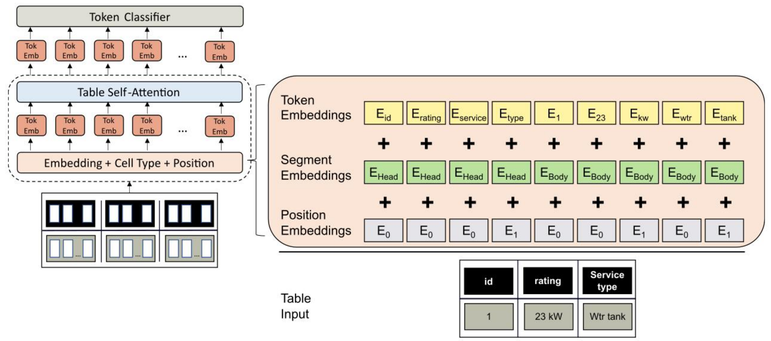

Cell-position and cell-type embeddings for linearized table tokens

- Existing TaLMs are not suitable for sub-cell NER task due to cell-pooling
- Simple modification to BERT by designing cell-wise position encodings and row-column attention masks [1]

Cell-level acquisition functions [2,3]

$$f_{\text{acq}}^{\text{MNLP}}(c_{i,j}; f_\theta) = \frac{1}{t}\sum_{z=1}^{t} \log y^*_{i,j,z}$$

- Select cells with least probable token label sequence

$$f_{\text{acq}}^{\text{BADGE}}(c_{i,j}; f_\theta) = k\text{-MEANS++}\left(\frac{1}{t}\sum_{z} \mathbf{g}_{i,j,z}\right)$$

- Sample from cell-averaged token gradient embeddings

Dataset:

Table 1: Training tables statistics

Statistic	Value
#tables	55
#cells	4,774
#labels	1,112
labels per cell	0.23

- Sub-cell NER is a highly imbalanced problem

Results

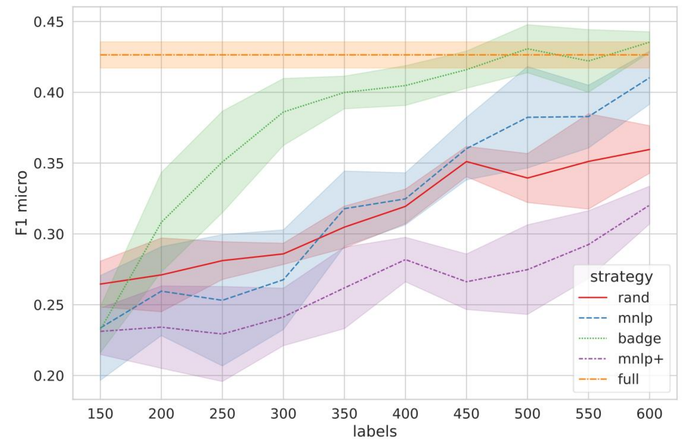

F1 score throughout iterations of cell candidate selection

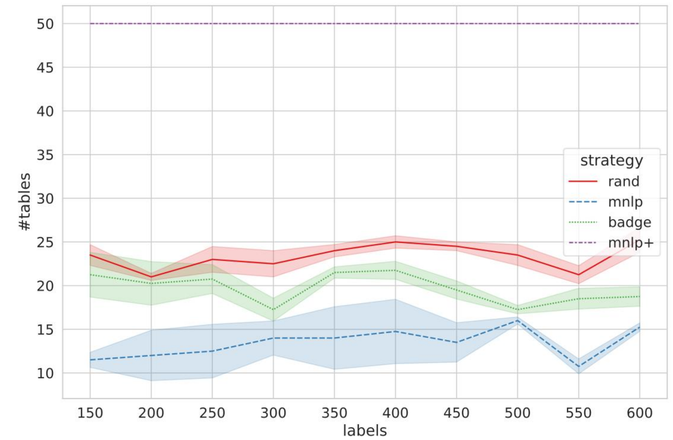

Number of tables from which cell candidates are selected

Findings:

- BADGE consistently outperforms random sampling
- MNLP lacks diversity, but enforcing table-diversity is also detrimental (MNLP+)

References

[1] Aneta Koleva et al. (2022). "Named Entity Recognition in Industrial Tables using Tabular Language Models" In: ArXiv 2209.14812

[2] Joran T. Ash et al. (2020). "Deep Batch Active Learning by Diverse, Uncertain Gradient Lower Bounds." In: ArXiv abs/1906.03671.

[3] Yanyao Shen et al. (2017). "Deep Active Learning for Named Entity Recognition". In: Proceedings of the 2nd Workshop on Representation Learning for NLP